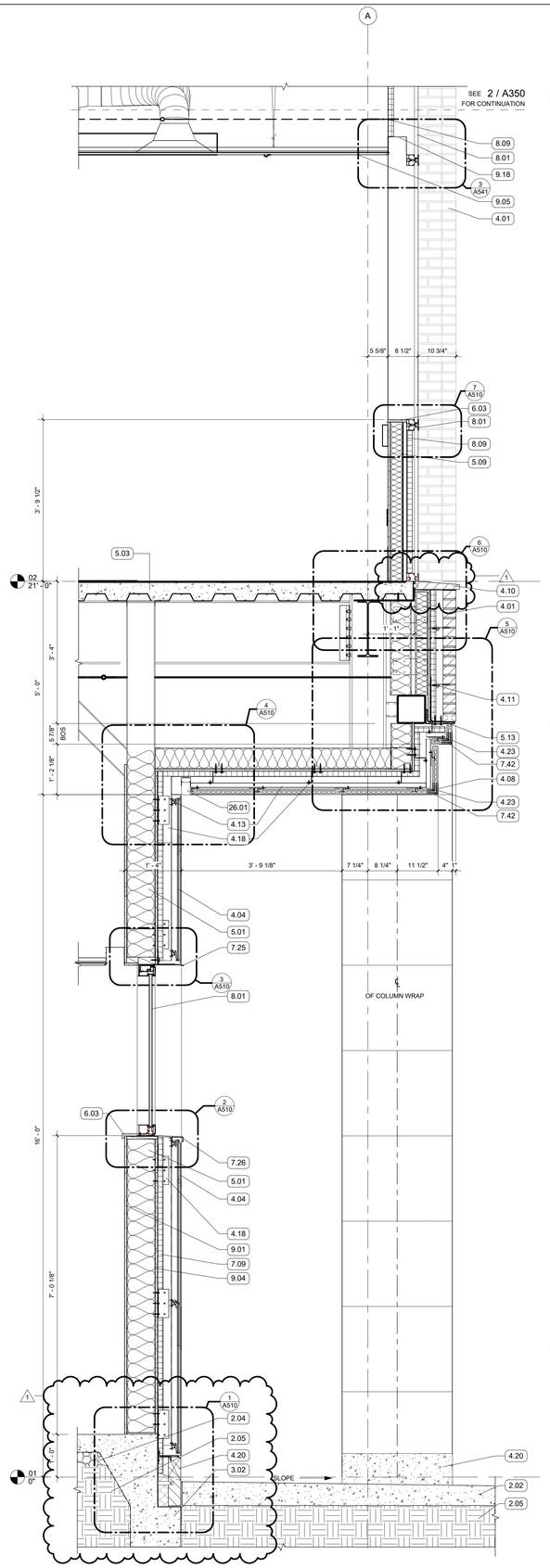

1 WALL SECTION
3/4" = 1'-0" | RE:1/A101

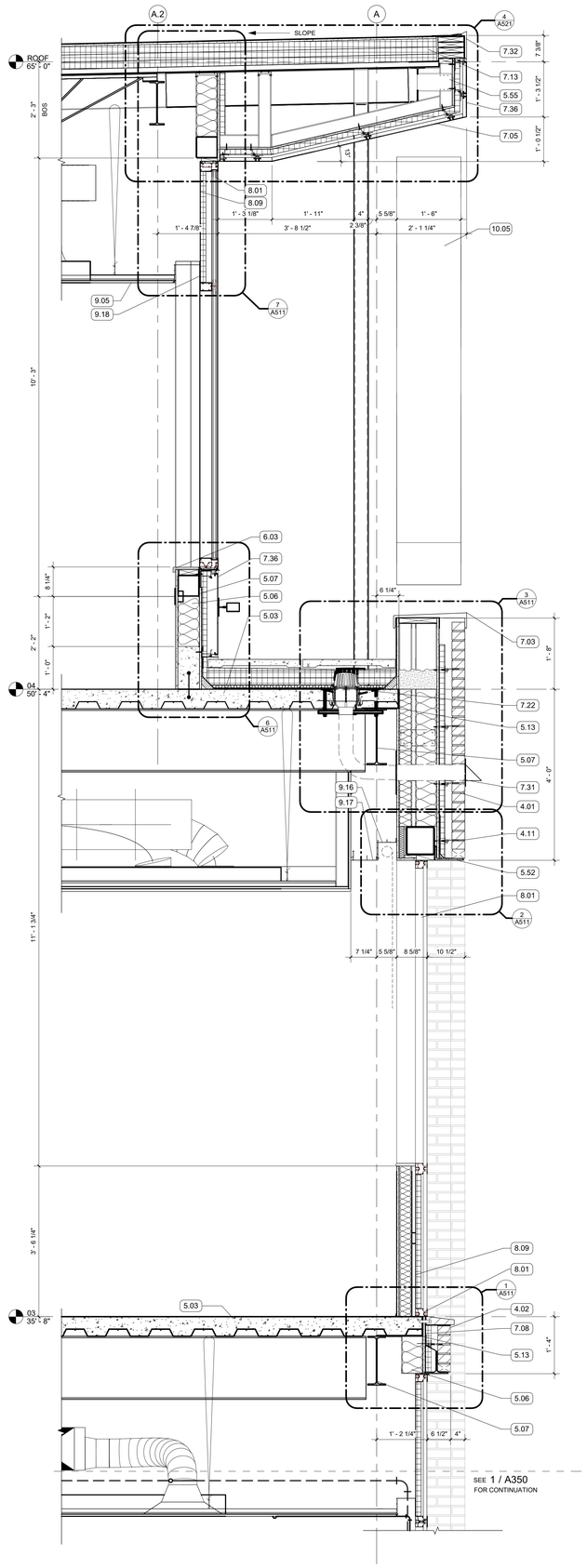

2 WALL SECTION
3/4" = 1'-0" | RE:1/A104

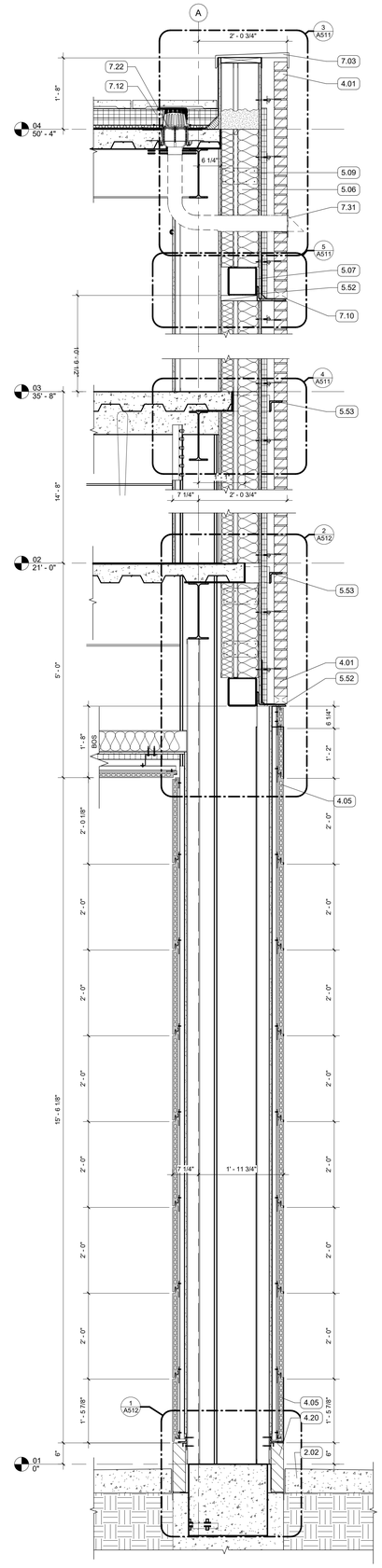

3 WALL SECTION
3/4" = 1'-0" | RE:1/A101

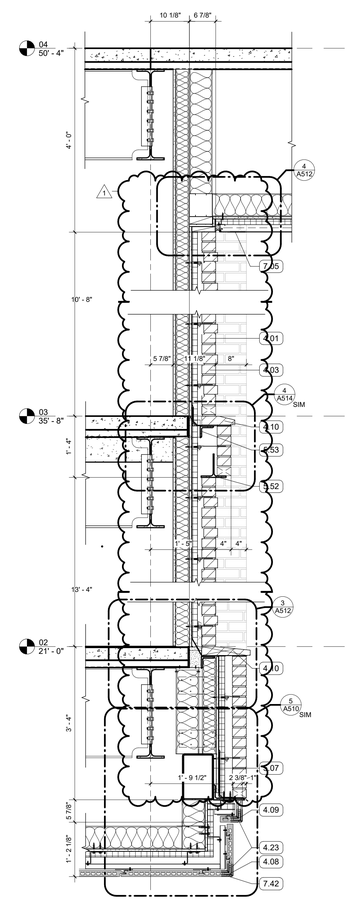

4 WALL SECTION
3/4" = 1'-0" | RE:1/A102

KEYNOTES

2.02	CONCRETE SIDEWALK
2.04	GRANULAR FILL
2.05	COMPACTED FILL
3.02	STRUCTURAL GRADE BEAM
4.01	FACE BRICK VENEER, RUNNING BOND
4.02	4" RECESSED BRICK COURSE, RUNNING BOND, RECESS HORIZONTAL BANDS AN ADDITIONAL 1/2"
4.03	8" RECESSED BRICK COURSE, STACK BOND, PROJECT EVERY 3RD COURSE 1/2"
4.04	TERRA COTTA RAINSCREEN - STACK BOND, UNIT SIZE #1
4.05	TERRA COTTA RAINSCREEN - COLUMN WRAP, UNIT SIZE #2
4.08	PLASTER SOFFIT SYSTEM ON MTL. FRAMING - ALTERNATE NO. 2 REPLACES PLASTER SYSTEM WITH TERRA COTTA LARGE FORMAT SOFFIT PANELS
4.09	TERRA COTTA SPECIAL SHAPE END ENCLSOURE
4.10	FACE BRICK, SPECIAL SHAPE SILL
4.11	MASONRY ANCHORS
4.13	NON-CONTINUOUS ALUMINUM SUBSTRUCTURE
4.18	CONTINUOUS ALUMINUM SUBSTRUCTURE
4.20	CAST STONE PANEL
4.23	BONDED CORNER
5.01	8" METAL STUD FRAMING
5.03	5 1/2" COMPOSITE MTL DECK AND CONCRETE SLAB
5.06	6" METAL STUD FRAMING
5.07	STRUCTURAL STEEL FRAMING
5.09	3 5/8" METAL STUD FRAMING
5.13	EDGE ANGLE
5.52	GALVANIZED LOOSE LINTEL - PAINT TO MATCH BRICK WHERE EXPOSED
5.53	SHELF ANGLE - RE: STRUCTURAL
5.55	UNIVERSAL BYPASS STEEL CLIP
6.03	SOLID SURFACE WINDOW STOOL WITH CHAMFERED EDGES
7.03	PREFINISHED COPING FLASHING
7.05	MCM PANEL SOFFIT
7.08	PROTECTION COURSE
7.09	MINERAL FIBER BOARD INSULATION
7.10	THRU-WALL FLASHING, SLOPED TO DRAIN
7.12	2 1/2" POLYISO INSULATION
7.13	2 PLY SBS ROOFING SYSTEM
7.22	ROOF DRAIN
7.25	FORMED ALUMINUM WINDOW HEAD FLASHING
7.26	FORMED ALUMINIUM SILL
7.31	ST STL SCUPPER
7.32	GRAVEL STOP FASCIA
7.36	MCM PANEL
7.42	DRIP EDGE
8.01	ALUM STOREFRONT, CURTAINWALL, OR WINDOW SYSTEM. SEE OPENING SCHEDULE
8.09	BACK PANEL
9.01	5/8" GYPSUM BOARD; SEE FINISH PLAN FOR FINISH MATERIAL
9.04	5/8" EXTERIOR SHEATHING
9.05	ACOUSTICAL CEILING TILE SYSTEM; SEE RCP AND FINISH SCHEDULE FOR TYPE
9.16	2-SIDED PERIMETER POCKET
9.17	CEILING PERIMETER FACE PLATE 7"
9.18	3-SIDED PERIMETER POCKET
10.05	EXTERIOR DIMENSIONAL LOGO SIGNAGE
26.01	RECESSED LED FIXTURE

LEGEND

ASHE | BROUSSARD | WEINZETTLE ARCHITECTS

TIPTON ASSOCIATES

CONSULTANTS
Moreaux-Butler & Associates, LLC — Civil
CARBO Landscape Architecture, LLC — Landscape
Fox-Nesbit Engineering, LLC — Structural
Sabe O'Brien — Mechanical (Plumbing & Fire Protection)
Associated Design Group, Inc. — Electrical
Geesler — Specialty Architecture

ISSUE FOR BID

LOUISIANA STATE UNIVERSITY ALEXANDRIA

DOWNTOWN HEALTH SERVICES CENTER

800 JACKSON ST.
ALEXANDRIA, LA 71301

PROJECT #	19-602-23-01
ARCH PROJECT #	2023.28 / 1531.00-23
SITE ID: NEW	SITE CODE: 6-40-023
DATE	OCTOBER 10, 2025

Ashe Broussard Weinzettle Architects, LLP
Tipton Associates APAC, A Joint Venture
301 Jackson Street, Suite 205
Alexandria, LA 71301

NO.	REVISION	DATE
1	Addendum No. 2	12.03.2025

WALL SECTIONS

A350